VICTROLA

THE BRIGHTON

MODEL: VTA-71
HVIN: VTA71B
INSTRUCTION MANUAL

PLEASE READ THIS INSTRUCTION MANUAL CAREFULLY BEFORE USE AND KEEP IT FOR FUTURE REFERENCE.

CONTENTS

Safety Instructions..... 1

Product Overview.....3

Setup/Basic Operation.....5

Vinyl Record Operation.....6

Bluetooth Operation.....7

Vinyl Stream™ - Bluetooth Out Operation..... 7

Maintenance/Proper Handling..... 8

Troubleshooting Guide.....9

Specifications.....11

FCC Statement 11

Other Warnings and Warranty 12

CAUTION

RISK OF ELECTRIC SHOCK
DO NOT OPEN

AVERTISSEMENT:

RISQUE DE CHOC ÉLECTRIQUE – NE PAS OUVRIR.

-This lightning flash with arrowhead symbol within an equilateral triangle is intended to alert the user to the presence of non-insulated "dangerous voltage" within the product's enclosure that may be of sufficient magnitude to constitute a risk of electric shock.

-**Warning:** To reduce the risk of electric shock, do not remove cover (or back) as there are no user-serviceable parts insides. Refer servicing to qualified personnel.

-The exclamation point within an equilateral triangle is intended to alert the user to the presence of important operating and maintenance instructions in the literature accompanying the appliance.

CAUTION: To reduce the risk of fire or electric shock, do not expose this appliance to rain or moisture.

WARNING: To prevent electric shock, do not use this (polarized) plug with an extension cord, receptacle or other outlet unless the blades can be fully inserted to prevent blade exposure.

SAFETY INSTRUCTIONS

1. Read these instructions – All the safety and operating instructions should be read before this product is operated.
2. Keep these instructions – The safety and operating instructions should be retained for future reference.
3. Heed all warnings – All warnings on the appliance and in the operating instructions should be adhered to.
4. Follow all instructions – All operating and use instructions should be followed.
5. Do not use this apparatus near water – The appliance should not be used near water or moisture – for example, in a wet basement or near a swimming pool, and the like.
6. Clean only with dry cloth.
7. Do not block any ventilation openings. Install in accordance with the manufacturer's instructions.
8. Do not install near any heat sources such as radiations, heat registers, stoves, or other apparatus (including amplifiers) that produce heat.

9. Do not defeat the safety purpose of the polarized or grounding plug. A polarized plug has two blades with one wider than the other. A grounding plug has two blades and a third grounding prong. The wide blade or the third prong is provided for your safety. If the provided plug does not fit into your outlet, consult an electrician for replacement of the obsolete outlet.
10. Protect the power cord from being walked on or pinched particularly at the plugs, convenience receptacles, and at the point where they exit from the apparatus.

11. Only use attachments/accessories specified by the manufacturer.
12. Use only with the cart, stand, tripod, bracket, or table specified by the manufacturer, or sold with the apparatus. When a cart or rack is used, use caution when moving the cart/apparatus combination to avoid injury from tip-over.
13. Unplug the apparatus during lighting storms or when unused for long periods of time.
14. Refer all servicing to qualified personnel. Servicing is required when the apparatus has been damaged in any way, such as power supply cord or plug is damaged, liquid has been spilled or objects have fallen into the apparatus has been exposed to rain or moisture, does not operate normally, or has been dropped.
15. The mains plug is used as disconnect device, the disconnect device shall remain readily operable.
16. To reduce the risk of fire or electric shock, do not expose this apparatus to rain or moisture. The apparatus shall not be exposed to dripping or splashing and that no objects filled with liquids, such as vases, shall not be placed on apparatus.
17. Use the equipment in a moderate climate.

ACCESSORIES INCLUDED

- INSTRUCTION MANUAL
- WARRANTY (BACK OF MANUAL)
- POWER ADAPTOR

PRODUCT OVERVIEW

Front View

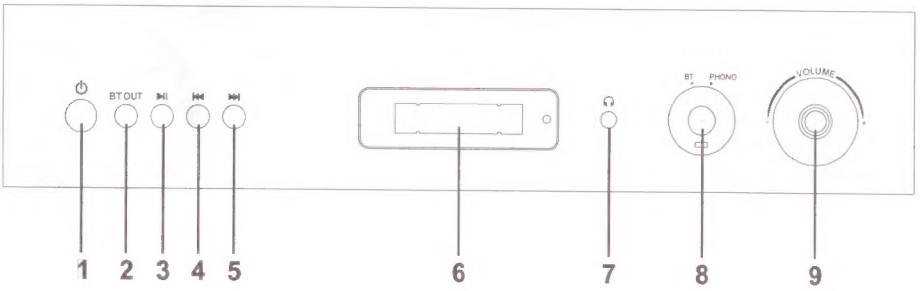

1. **POWER**: Press to turn the unit ON or OFF.
2. **BT OUT**: Press to activate the Bluetooth output function.
3. **PLAY/PAUSE** (▶II)
   Press to start playback, press again to pause.
   Long press the button for 3 seconds to disconnect the Bluetooth pairing.
   (**NOTE**: This button only works in Bluetooth mode.)
4. **PREVIOUS** (I◀◀)
   Skip to the previous track or station.
5. **NEXT** (▶▶I)
   Skip to the next track or station.
6. **Display Screen**
7. **3.5mm EARPHONE JACK**: Accepts headphone/earphone plugs.
8. **BT/PHONO/FM KNOB**: Turn to select BT/PHONO mode.
9. **VOLUME KNOB**: Turn to adjust volume.

Rear View

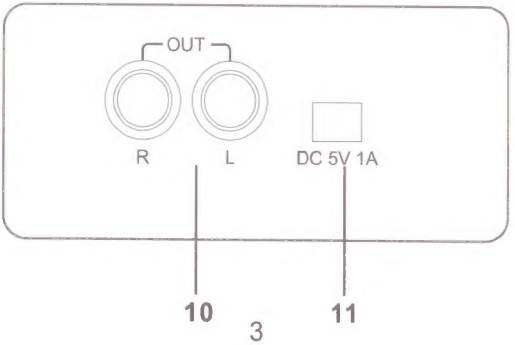

10. **LINE OUT jacks**
For amplifier device with RCA auxiliary input sockets, insert the white and red plugs on the RCA cable into the unit. Insert the opposite end into the amplifier device. Be sure to connect the white plug to the white jack and the red plug to the red jack.
11. **DC Input Jack**
Connect the power adapter to the jack to power on the unit.

Part of the Turntable

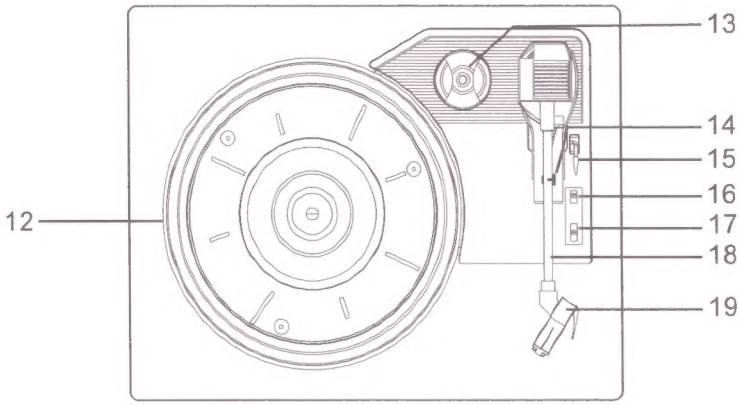

12. **Turntable**
13. **45 RPM adapter**
14. **Tone Arm holder**
15. **Cue Lever:** Before use, gently push the Tone Arm holder to the right to release the TONE ARM.
16. **AUTO STOP ON/OFF SWITCH**: Switch "ON", the turntable will stop automatically when finish playing. Switch "OFF", the turntable will keep turning when finished playing.
17. **Speed Selector**
18. **Tone Arm**
19. **STYLUS**

SETUP/BASIC OPERATION

Setup

1. Remove white protective needle cover by gently pulling towards front of unit.
2. Remove any packaging materials from the unit.
3. Connect the power adapter to the DC Input jack to power on the unit.

Note:

- It is strongly recommended that this product should be operated only from the type of power source indicated on the marking label.

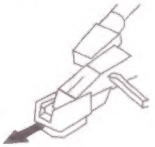

Basic Operation

1. Press the POWER button to turn the unit on.
2. Select mode by turning the BT/PHONO KNOB.
3. Rotate the VOLUME KNOB to adjust to the desired sound level.

Listening through RCA LINE OUT

For amplifier device listening, first reduce the volume level to minimum. Insert the white and red plugs on the RCA cable into the unit, then insert the opposite end into the amplifier device. Be sure to connect the white plug to the white jack and the red plug to the red jack.

Listening through Earphones/Headphones (not included)

For private listening, first reduce the volume level to minimum. Insert your headphones' plug into the 3.5mm jack, then adjust the volume up by turning the VOLUME KNOB.

Note: The speakers will automatically be deactivated while headphones are plugged in.

CONDENSATION WARNING:

When the unit is moved from a cold or warm place, or is used following a sudden temperature change, there is the danger that water vapor in the air may condense on the unit, preventing proper operation. In such cases, leave the unit for 1-2 hours after plugging it into an AC outlet to allow it to stabilize at the temperature of its surroundings.

VINYL RECORD OPERATION

1. Turn the unit ON by pressing the POWER button.
2. Turn the BT/PHONO KNOB to enter the PHONO mode.
3. Gently open the dust cover.
4. Put the record on the turntable. Select the speed. When playing a 45 RPM record, use the included 45 adaptor.

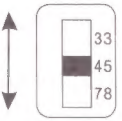

5. Gently push the Tone Arm holder to the right to release the TONE ARM.
6. Raise the Cue Lever to lift the TONE ARM off the tone arm support.
7. Move the TONE ARM gently to the edge of the record (or the starting point of the track). The turntable will begin to turn.
8. Gently lower the TONE ARM by slowly releasing the CUE LEVER. *You can lower the TONE ARM manually if the CUE LEVER has not been raised.*
9. Turn the VOLUME KNOB to adjust the volume.
10. When playback has finished, slightly lift the tone arm using the CUE LEVER and return it to the TONE ARM holder.

BLUETOOTH OPERATION

An external device with Bluetooth Connectivity can be wirelessly connected to this turntable using the Bluetooth Function.

GETTING CONNECTED USING BLUETOOTH

1. Turn the BT/PHONO KNOB to select BT mode. The "bt" will flash on the Display Screen.
2. Turn your external devices' Bluetooth Setting ON. Wait a moment, then look for the Bluetooth Pairing name **"Victrola Brighton"**

NOTE: The effective distance between your external device and this unit is 10 meters (33ft).

3. Select the Bluetooth pairing name, to connect the unit. Once connected the "bt" on the Display Screen will stop flashing.
4. Select the music media files on your external device, then press the PLAY/PAUSE button (▶II) to begin playback.
5. To temporarily pause playback, press the PLAY/PAUSE button (▶II) when playback. Press again to resume.
6. To skip to the previous or the next tracks, press the PREVIOUS/NEXT button (I◀◀ or ▶▶I) to listen.

VINYL STREAM™ - BLUETOOTH OUT OPERATION

The product supports Bluetooth wireless connection (BT-OUT). It can be connected with external Bluetooth-compatible headphones (not included) and Bluetooth speakers (not included)

1. When playing your vinyl record, press the BT OUT button.
2. The " ✱ " icon flashes on the Display Screen.
3. Turn ON your external Bluetooth receiver device (such as Bluetooth headphones and Bluetooth Speakers) and set to pairing mode.
4. Wait for a few seconds, they will make connection to each other automatically.
5. The " ✱ " icon stops flashing once successful paired.
6. Control the playback from your BT speaker.
   (You can only adjust the volume from your external Bluetooth Device.)

- Place the Bluetooth device within 1m (3.3') of the product to perform pairing correctly.
- The product stays in the pairing mode for about 30 seconds. If pairing is not properly completed, follow the above steps again from the beginning after turning all devices OFF.
- "BT OUT" is only compatible with vinyl record playback.

MAINTENANCE/PROPER HANDLING

Handling Vinyl Records

- Do not touch the record's grooves. Only handle records by the edges or the label with clean hands. Touching the record surface will cause your record's quality to deteriorate.
- To clean a record, use a soft anti-static cloth to gently wipe the record surface.
- Keep records in their protective sleeves when not in use.
- Always store records upright on their edges.
- Avoid placing records in direct sunlight, close to a heat source (radiators, stoves, etc.), or in a location subject to vibration, excessive dust, heat, cold or moisture.

HOW TO REPLACE THE TURNTABLE STYLUS *(Replacement Stylus # VND-08)*

Removing the Stylus from the Cartridge

1. Using your fingers, hold at point "**A**" and push down point "**B**"
   WARNING: When applying force to stylus, too much may damage or break the stylus.
2. Continue to push down until the stylus separates from the front of the cartridge.
3. Remove the rear of the stylus carefully from the cartridge.

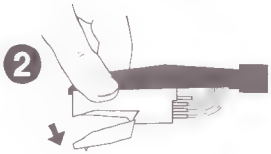

Installing the Stylus

1. Follow the previous steps but in reverse.

Caution:

- Do not remove or bend the stylus needle.
- Do not touch the needle to avoid injury to your hand.
- Turn off the unit's power before you replace the stylus.
- Keep out of reach of children.

Please note: *The stylus should last about 50 hours under normal use. It is recommended that the stylus be replaced as soon as you notice a change in sound quality*

TROUBLESHOOTING GUIDE

	Symptom	Possible Cause	Solution
GENERAL	• Unit will not power on	• Unit is unplugged.	• Connect the DC power adapter to the jack.
	• No sound output from speakers	• The volume level is set too low. • The input selector does not match the playback source.	• Adjust the volume. • Select the correct input source.
	• Noise/Distortion in sound output	• The unit is too close to a TV set or another interfering device.	• Turn off the TV or other appliance, and relocate the unit.
	• Unit fails to respond	• It might result from external factors such as ESD (Electro-static discharge).	• Disconnect the power cord and external audio device. Re-plug the power cord after one minute.
PHONO	• Decline in turntable audio performance	• The turntable stylus is worn out.	• Replace the stylus.

	Symptom	Possible Cause	Solution
BLUETOOTH	• No sound	• The unit is not switched to Bluetooth mode. • Your device's and/or your unit's volume is not turn up. • Your device is too far from the unit or there're some obstacle between your device and your unit.	• Ensure the unit is switched to BT mode. • Move your Bluetooth device closer to unit. • Turn up the volume on your portable device and/or the unit. • Turn OFF your bluetooth device and unit. Then power them both back ON.
	• Sound has a lot of static	• Your device is too far away.	• Bring your device closer to the turntable.
	• Unable to pair with a Bluetooth device	• Your device dosen't have Bluetooth connectivity. • The Bluetooth pairing is not successful	• Confirm that your device is Bluetooth compatible. • Re-pair the unit and device again.
BLUETOOTH-OUT	• The connection takes too long	• The time of connection depends on the connecting device	• Wait for a moment • Turn OFF your bluetooth device and unit. Then power them both back ON.

Please note: As a result of continual improvements, the design and specifications of this product are subject to change without notice.

Made in China.

Bluetooth is a registered trademark of Bluetooth SIG, Inc.
Other trademarks and trade names are those of their respective owners.

Victrola is a registered trademark of Innovative Technology Electronics LLC.

SPECIFICATIONS

GENERAL

Power adapter ---------- DC 5V/1A
Power Consumption ---------- 5W
Power Output ---------- 2 × 2W
Size ---------- 12.7" (322mm) W × 12.3" (312mm) D × 5.2" (131mm) H
Weight ---------- 4.5 lbs (2kg)

RECORD PLAYER

Speeds ---------- 33-1/3 RPM, 45 RPM and 78 RPM

BLUETOOTH

Bluetooth Version ---------- V5.1
Bluetooth Profiles ---------- A2DP, AVRCP
Bluetooth Frequency range ------ 2.402GHz-2.480GHz
Operating Distance ---------- 10 meters (33 ft.)

FCC STATEMENT

1. This device complies with Part 15 of the FCC Rules. Operation is subject to the following two conditions:
   (1) This device may not cause harmful interference, and
   (2) This device must accept any interference received, including interference that may cause undesired operation.
2. Changes or modifications to this unit not expressly approved by the party responsible for compliance could void the user's authority to operate the equipment.

NOTE: This equipment has been tested and found to comply with the limits for Class B digital device, pursuant to part 15 of the FCC Rules. These limits are designed to provide reasonable protection against harmful interference in a residential installation. This equipment generates, uses and can radiate radio frequency energy and, if not installed and used in accordance with the instructions, may cause harmful interference to radio communications. However, there is no guarantee that interference will not occur in a particular installation. If this equipment does cause harmful interference to radio or television reception, which can be determined by turning the equipment off and on, the user is encouraged to try to correct the interference by one or more of the following measures:

-Reorient or relocate the receiving antenna.
-Increase the separation between the equipment and the receiver.
-Connect the equipment into an outlet on a circuit different from that to which the receiver is connected.
-Consult the dealer or an experienced radio/TV technician for help.

IC WARNING

This device contains license-exempt transmitter(s)/receiver(s) that comply with Innovation, Science and Economic Development Canada's license-exempt RSS(s). Operation is subject to the following two conditions:

(1) This device may not cause interference; and

(2) This device must accept any interference, including interference that may cause undesired operation of the device.

This equipment complies with FCC and IC radiation exposure limits set forth for an uncontrolled environment. This equipment should be installed and operated with a minimum distance of 20cm between the radiator & your body.

AVERTISSEMENT IC

Cet appareil contient des émetteurs / récepteurs exempt (s) de licence qui sont conformes aux RSS exemptes de licence d'Innovation, Sciences et Développement économique Canada. Son fonctionnement est soumis aux deux conditions suivantes :

(1) Cet appareil ne doit pas provoquer d'interférences ; et

(2) Cet appareil doit accepter toute interférence, y compris les interférences susceptibles de provoquer un fonctionnement indésirable de l'appareil.

Cet équipement est conforme aux limites d'exposition aux rayonnements FCC et IC établies pour un environnement non contrôlé. Cet équipement doit être installé et utilisé à une distance minimale de 20 cm entre le radiateur et votre corps.

Radiation Exposure statement

This equipment complies with FCC and IC RSS-102 radiation exposure limits set forth for an uncontrolled environment. This equipment should be installed and operated with minimum distance 20cm between the radiator and your body. This transmitter must not be co-located or operating in conjunction with any other antenna or transmitter.

Cet équipement est conforme aux limites d'exposition aux radiations FCC et IC CNR-102 établies pour un environnement non contrôlé. Cet équipement doit être installé et utilisé avec une distance minimale de 20 cm entre le radiateur et votre corps. Cet émetteur ne doit pas être colocalisé ou fonctionner en conjonction avec une autre antenne ou un autre émetteur.

WARRANTY

United States

Victrola (Innovative Technology Electronics, LLC) warrants to the original retail purchaser that this product will be free from defective materials and workmanship for one (1) year from the date of purchase, subject to the limitations below. This warranty period is not extended if we replace the product.

To obtain a replacement under the terms of this warranty, you must contact the dealer from which it was purchased with your original receipt. If assistance from the dealer from which it was purchased is impossible, you may contact our customer service for warranty assistance at victrola.com/contact.

Except as limited below, if the product proves defective in either material or workmanship within one (1) year from the date of purchase, Victrola will replace the product at no charge. If the product model is no longer available and cannot be replaced with an identical model, Victrola will issue a merchandise credit for the purchase price to be redeemed at victrola.com.

Limitations:

- This limited warranty does not cover failure of the product arising, in whole or in part, from improper installation, storage, transportation, misuse, abuse, accident, neglect, mishandling, unauthorized repair, modification, or wear from ordinary use or environmental deterioration.
- This limited warranty does not cover cosmetic damage, including paint damage, or consequential damage to other components or premises which may result for any reason from the failure of the product.
- This limited warranty is null and void for products not used in accordance with Victrola's instructions.
- This limited warranty terminates if the original retail purchaser sells or otherwise transfers this product.
- This limited warranty is null and void for defects or damage caused by installation or repair performed by any person or entity other than a Victrola authorized installer or dealer.

This warranty gives you specific legal rights, and you may also have other rights which vary from state to state, jurisdiction to jurisdiction or country to country. All express and implied warranties for the product, including but not limited to any implied warranties of merchantability and fitness for a particular purpose, are limited in time to the term of this warranty. Some states, jurisdictions or countries do not allow the exclusion of certain implied warranties or conditions, or limitations on how long an implied warranty or condition lasts, so this limitation may not apply to you. Victrola's responsibility for malfunctions and defects in hardware is limited to replacement or repair as set forth in this warranty statement. Victrola does not accept liability for special, punitive, consequential or incidental damages or losses, whether direct or indirect, including without limitation, any liability for third party claims against you for damages or losses or for products not being available for use. The maximum liability for which Victrola may be responsible will be no more than the amount you paid for the product that is the subject of the claim. Some states, jurisdictions or countries do not allow the exclusion or limitation of special, indirect, incidental or consequential damages, so the above limitation or exclusion may not apply to you.

Canada and US Territories

The Warranty on this product shall comply with applicable law when sold to a consumer in Canada or a US Territory. To obtain any applicable warranty service, please contact the dealer from which you purchased the product, or the distributor that supplied the product, with your original receipt. If assistance from the dealer from which it was purchased is impossible, you may contact our customer service for warranty assistance at victrola.com/contact.

If this product proves defective in either material or workmanship, Victrola will replace the product at no charge. If the product model is no longer available and cannot be repaired effectively or replaced with an identical model, Victrola at its sole option may replace the unit with a current model of equal or greater value.

Outside the U.S, Canada, and US Territories

The Warranty on this product shall comply with applicable law when sold to a consumer outside of the United States, Canada, and US Territories. To obtain any applicable warranty service, please contact the dealer from which you purchased the product, or the distributor that supplied the product, with your original receipt.